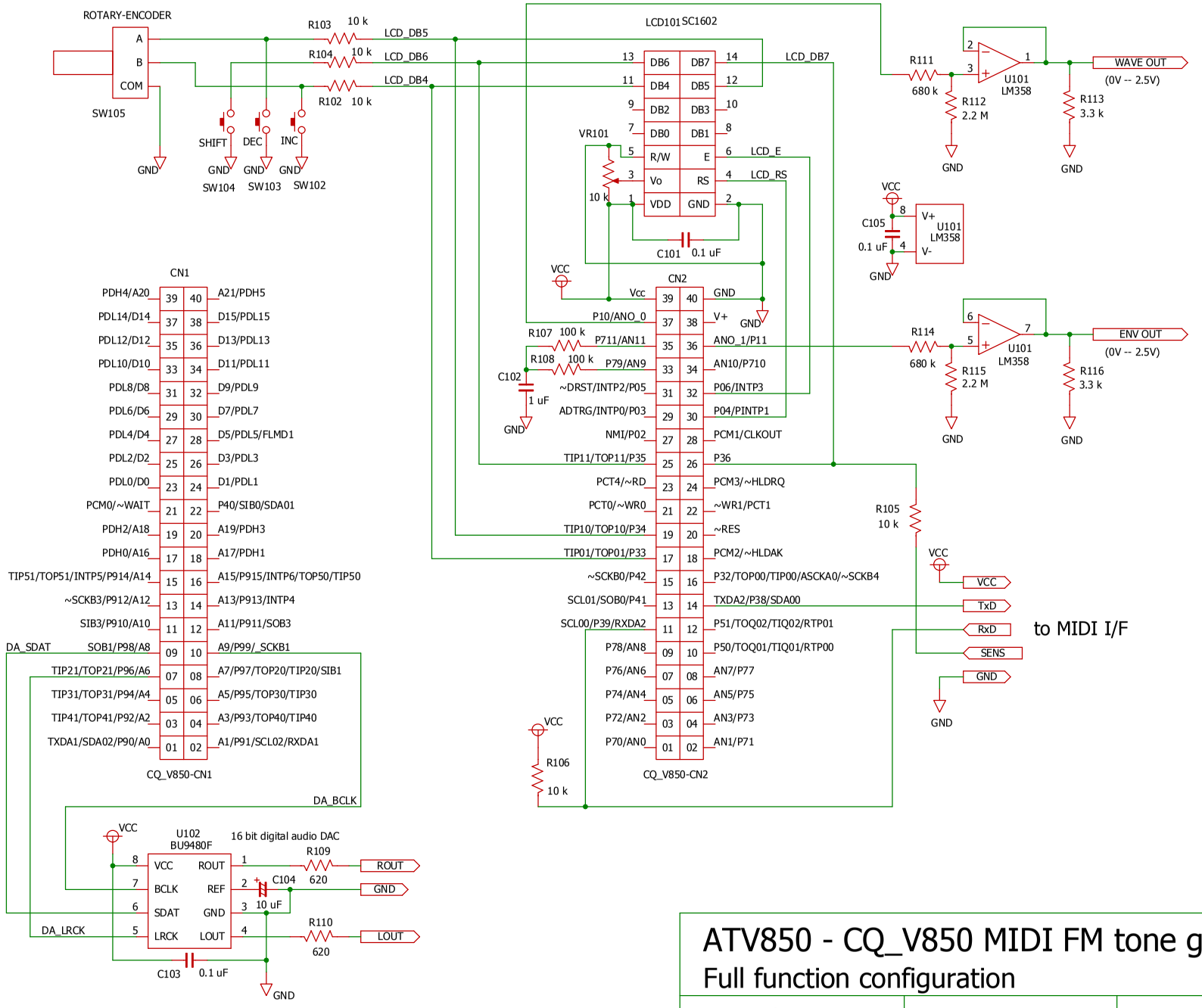

ATV850 - CQ_V850 MIDI FM tone generator

Full function configuration

Designed: pcm1723	Version: 1.00	Date: 2007-Jun-5