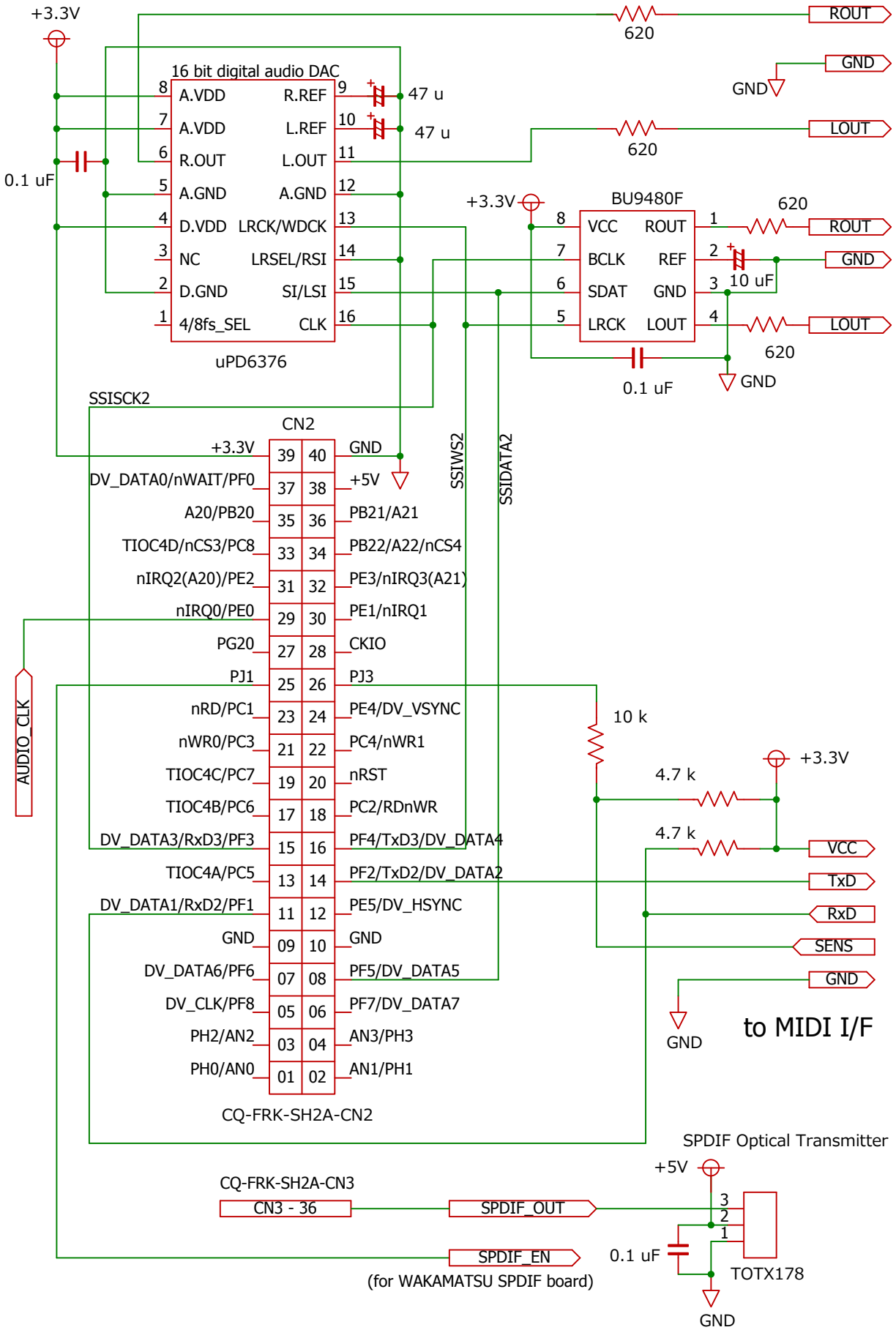

TGSH2A - CQ-FRK-SH2A MIDI FM tone generator

Designed: pcm1723	Version: 1.00	Date: 2010-May-15