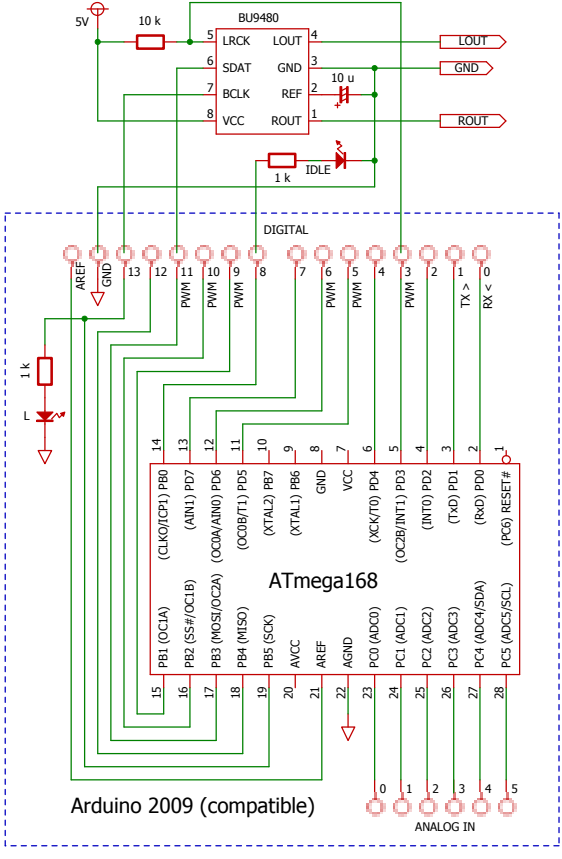
5V
10 k
BU9480
LRCK
SDAT
BCLK
VCC
LOUT
GND
REF
ROUT
10 u
LOUT
GND
ROUT
1 k
IDLE
DIGITAL
AREF
GND
13
12
11 PWM
10 PWM
9 PWM
8
7
6 PWM
5 PWM
4
3 PWM
2
1 TX >
0 RX <
1 k
L
14 (CLKO/ICP1) PB0
13 (AIN1) PD7
12 (OC0A/AIN0) PD6
11 (OC0B/T1) PD5
10 (XTAL2) PB7
9 (XTAL1) PB6
8 GND
7 VCC
6 (XCK/T0) PD4
5 (OC2B/INT1) PD3
4 (INT0) PD2
3 (TxD) PD1
2 (RxD) PD0
1 (PC6) RESET#
ATmega168
15 PB1 (OC1A)
16 PB2 (SS#/OC1B)
17 PB3 (MOSI/OC2A)
18 PB4 (MISO)
19 PB5 (SCK)
20 AVCC
21 AREF
22 AGND
23 PC0 (ADC0)
24 PC1 (ADC1)
25 PC2 (ADC2)
26 PC3 (ADC3)
27 PC4 (ADC4/SDA)
28 PC5 (ADC5/SCL)
0
1
2
3
4
5
ANALOG IN
Arduino 2009 (compatible)