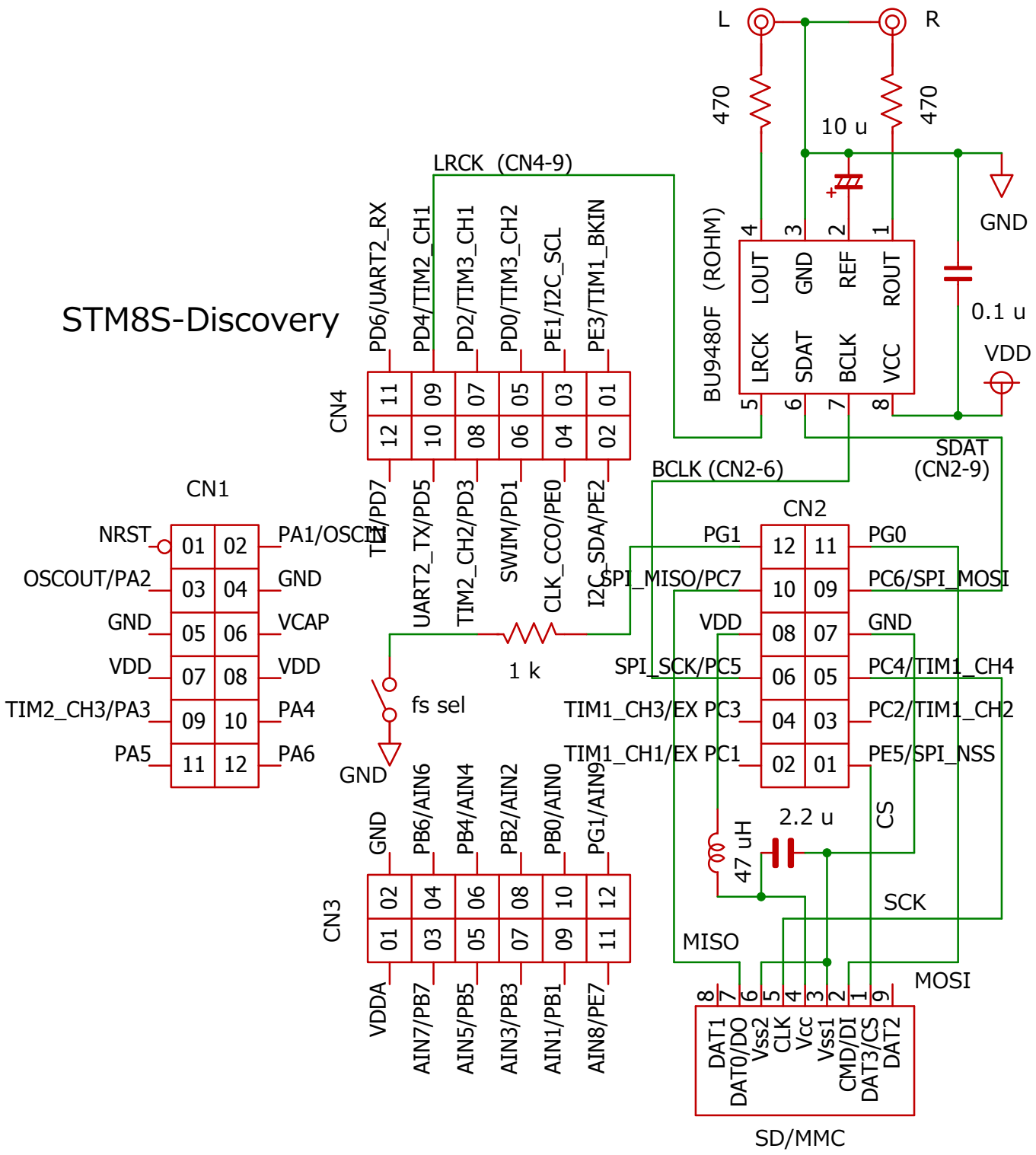
STM8S-Discovery
L
R
470
470
10 u
GND
0.1 u
VDD
BU9480F (ROHM)
LOUT
GND
REF
ROUT
LRCK
SDAT
BCLK
VCC
LRCK (CN4-9)
PD6/UART2_RX
PD4/TIM2_CH1
PD2/TIM3_CH1
PD0/TIM3_CH2
PE1/I2C_SCL
PE3/TIM1_BKIN
CN4
TIM/PD7
UART2_TX/PD5
TIM2_CH2/PD3
SWIM/PD1
CLK_CCO/PE0
I2C_SDA/PE2
BCLK (CN2-6)
SDAT (CN2-9)
CN1
NRST
PA1/OSCIN
OSCOUT/PA2
GND
VCAP
VDD
TIM2_CH3/PA3
PA4
PA5
PA6
1 k
fs sel
GND
CN2
PG1
PG0
SPI_MISO/PC7
PC6/SPI_MOSI
VDD
GND
SPI_SCK/PC5
PC4/TIM1_CH4
TIM1_CH3/EX PC3
PC2/TIM1_CH2
TIM1_CH1/EX PC1
PE5/SPI_NSS
CS
2.2 u
47 uH
SCK
MISO
MOSI
CN3
GND
PB6/AIN6
PB4/AIN4
PB2/AIN2
PB0/AIN0
PG1/AIN9
VDDA
AIN7/PB7
AIN5/PB5
AIN3/PB3
AIN1/PB1
AIN8/PE7
DAT1
DAT0/DO
Vss2
CLK
Vcc
Vss1
CMD/DI
DAT3/CS
DAT2
SD/MMC